Wm Johnson

TELETYPESETTER®

BULLETIN 54B

PARTS FOR THE

UNIVERSAL OPERATING UNIT

FAIRCHILD
GRAPHIC EQUIPMENT
FAIRCHILD DRIVE, PLAINVIEW, L. I., NEW YORK

280

TELETYPESETTER®

BULLETIN 54B

PARTS FOR THE UNIVERSAL OPERATING UNIT

FAIRCHILD
GRAPHIC EQUIPMENT
DIVISION OF
FAIRCHILD CAMERA AND INSTRUMENT CORP

Copyright 1952 by Fairchild Camera and Instrument Corp.
Copyright in all countries participating in International Convention and Pan American Conventions. All rights reserved including rights of translations into all languages.

Printed in U.S.A.

LIST OF EFFECTIVE PAGES

JUNE, 1960

Page Number	Change in Effect	Page Number	Change in Effect
A	Change 3	10	Change 1
B	Change 2	11	Original
1	Change 2	12	Change 3
2	Change 2	13	Change 3
3	Change 3		
4	Change 2		
5	Change 2		
6	Change 1		
7	Change 2		
8	Change 1		
9	Change 2		

The above list indicates the effective pages as of the date of issue. When a change takes place in any of the following pages, this page likewise changes.

ALPHABETICAL INDEX

	Page
Base	1
Bell Cranks and Bearing	1, 2
Clutch Magnet	9
Code Bars	1, 10
Code Bar Extensions	8
Code Levers	9
Control Bail and Contacts	9
Covers	10
Delay Mechanism	7
Elevator Clutch Shaft	3
Elevator Clutch Shaft Bearing	4
Elevator Clutch Trip Mechanism	2
Elevator Latch and Bracket	4
Extension Shaft	1
Hanger	1, 2
Manual Reset Cam and Detent	3
Numerical Index	12, 13
Pulley Shaft	1
Push Bar Levers	7
Push Bar Mechanism	2
Repeat Character Delay Mechanism	3
Selecting Mechanism	6
Selector Clutch Shaft	3
Selector Clutch Shaft Bearing	4
Shift Mechanism	6
Tape Feed Mechanism	7
Tape Out Contact	5
Tape Reel	10
Tight Tape Mechanism	1
Timing Cam and Contacts	3
Timing Contacts Terminal Block	2
Tools	11
Top Plate	5
Transfer Bail and Levers	7

NOTE: Unless otherwise specified, all parts shown in this Bulletin are common to TOU11, TOU14 and TOU17.

CODE BAR ARRANGEMENTS																
LOCATION	SHIFT CODE BAR		"0" CODE BAR		"1" CODE BAR		"2" CODE BAR		BLOCKING CODE BAR		"3" CODE BAR		"4" CODE BAR		"5" CODE BAR	
ARRANGEMENT	STAMPED	PART NO.	STAMPED	PART NO.	STAMPED	PART NO.	STAMPED	PART NO.	STAMPED	PART NO.	STAMPED	PART NO.	STAMPED	PART NO.	STAMPED	PART NO.
AK	—	91137	0	93058	1	93059	2	91138	BB	122643	3	93060	4	85501	5	85502
AN	—	91137	0	85497	1	85498	2	91138	BB	122797	3	85500	4	85501	5	85502
AQ	—	97273	0	93058	1	93059	2	91138	BB	122643	3	93060	4	85501	5	85502
AR	—	97273	0	85497	1	85498	2	91138	BB	122797	3	85500	4	85501	5	85502

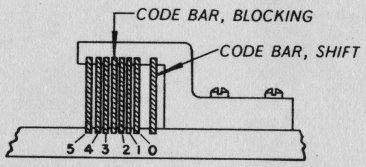

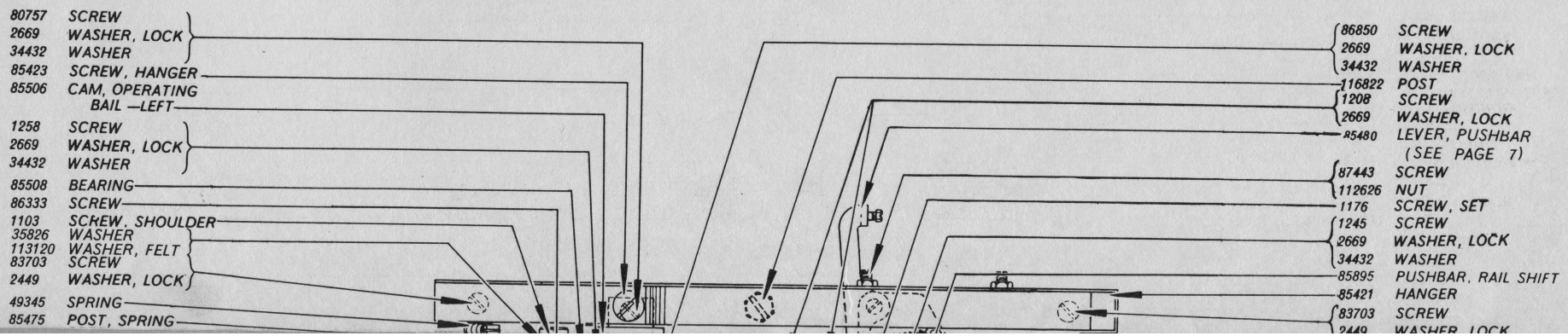

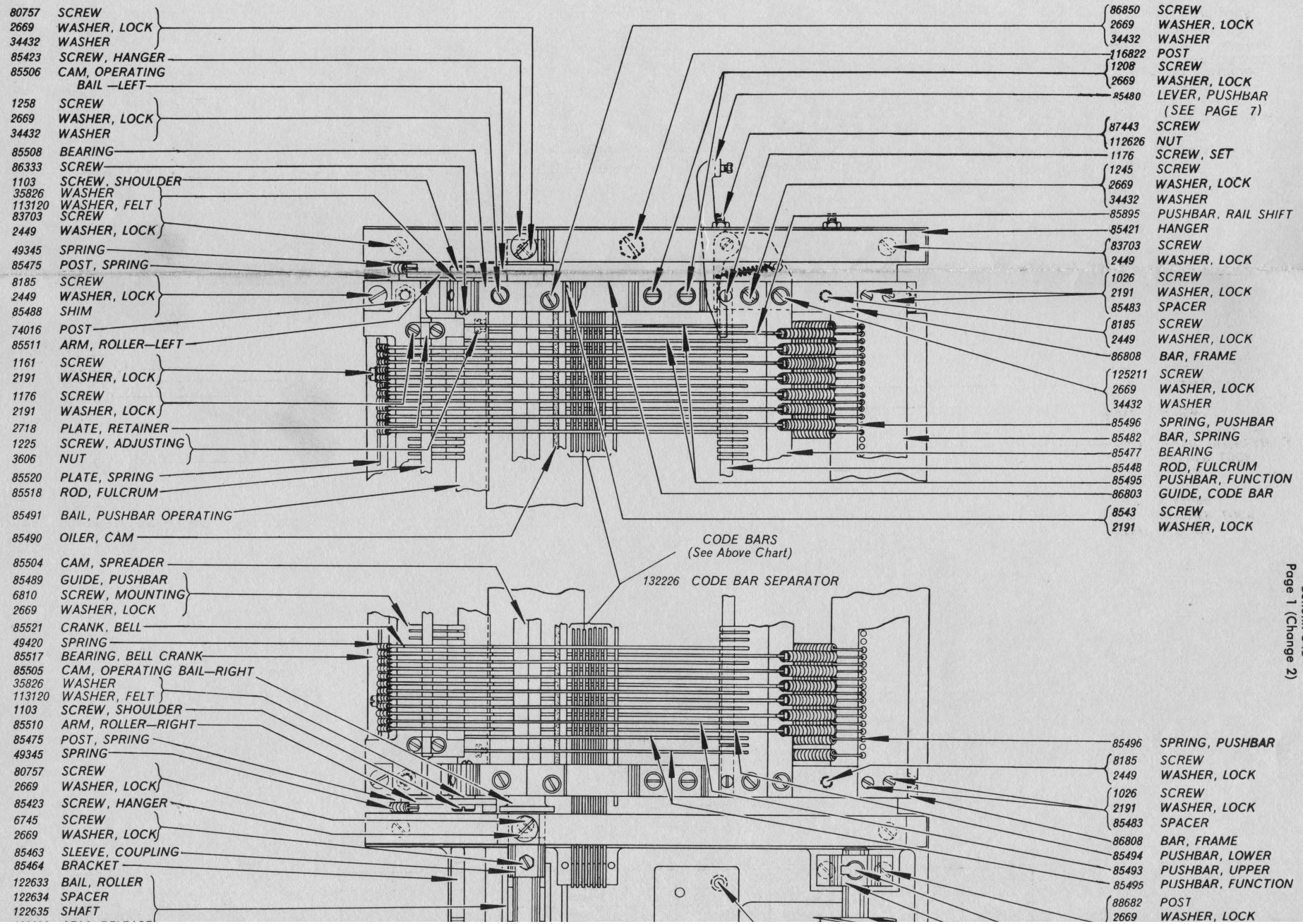
80757 SCREW
2669 WASHER, LOCK
34432 WASHER
85423 SCREW, HANGER
85506 CAM, OPERATING BAIL —LEFT
1258 SCREW
2669 WASHER, LOCK
34432 WASHER
85508 BEARING
86333 SCREW
1103 SCREW, SHOULDER
35826 WASHER
113120 WASHER, FELT
83703 SCREW
2449 WASHER, LOCK
49345 SPRING
85475 POST, SPRING
8185 SCREW
2449 WASHER, LOCK
85488 SHIM
74016 POST
85511 ARM, ROLLER—LEFT
1161 SCREW
2191 WASHER, LOCK
1176 SCREW
2191 WASHER, LOCK
2718 PLATE, RETAINER
1225 SCREW, ADJUSTING
3606 NUT
85520 PLATE, SPRING
85518 ROD, FULCRUM
85491 BAIL, PUSHBAR OPERATING
85490 OILER, CAM
86850 SCREW
2669 WASHER, LOCK
34432 WASHER
116822 POST
1208 SCREW
2669 WASHER, LOCK
85480 LEVER, PUSHBAR (SEE PAGE 7)
87443 SCREW
112626 NUT
1176 SCREW, SET
1245 SCREW
2669 WASHER, LOCK
34432 WASHER
85895 PUSHBAR, RAIL SHIFT
85421 HANGER
83703 SCREW
2449 WASHER, LOCK
1026 SCREW
2191 WASHER, LOCK
85483 SPACER
8185 SCREW
2449 WASHER, LOCK
86808 BAR, FRAME
125211 SCREW
2669 WASHER, LOCK
34432 WASHER
85496 SPRING, PUSHBAR
85482 BAR, SPRING
85477 BEARING
85448 ROD, FULCRUM
85495 PUSHBAR, FUNCTION
86803 GUIDE, CODE BAR
8543 SCREW
2191 WASHER, LOCK
CODE BARS
(See Above Chart)
132226 CODE BAR SEPARATOR
85504 CAM, SPREADER
85489 GUIDE, PUSHBAR
6810 SCREW, MOUNTING
2669 WASHER, LOCK
85521 CRANK, BELL
49420 SPRING
85517 BEARING, BELL CRANK
85505 CAM, OPERATING BAIL—RIGHT
35826 WASHER
113120 WASHER, FELT
1103 SCREW, SHOULDER
85510 ARM, ROLLER—RIGHT
85475 POST, SPRING
49345 SPRING
80757 SCREW
2669 WASHER, LOCK
85423 SCREW, HANGER
6745 SCREW
2669 WASHER, LOCK
85463 SLEEVE, COUPLING
85464 BRACKET
122633 BAIL, ROLLER
122634 SPACER
122635 SHAFT
85496 SPRING, PUSHBAR
8185 SCREW
2449 WASHER, LOCK
1026 SCREW
2191 WASHER, LOCK
85483 SPACER
86808 BAR, FRAME
85494 PUSHBAR, LOWER
85493 PUSHBAR, UPPER
85495 PUSHBAR, FUNCTION
88682 POST
2669 WASHER, LOCK

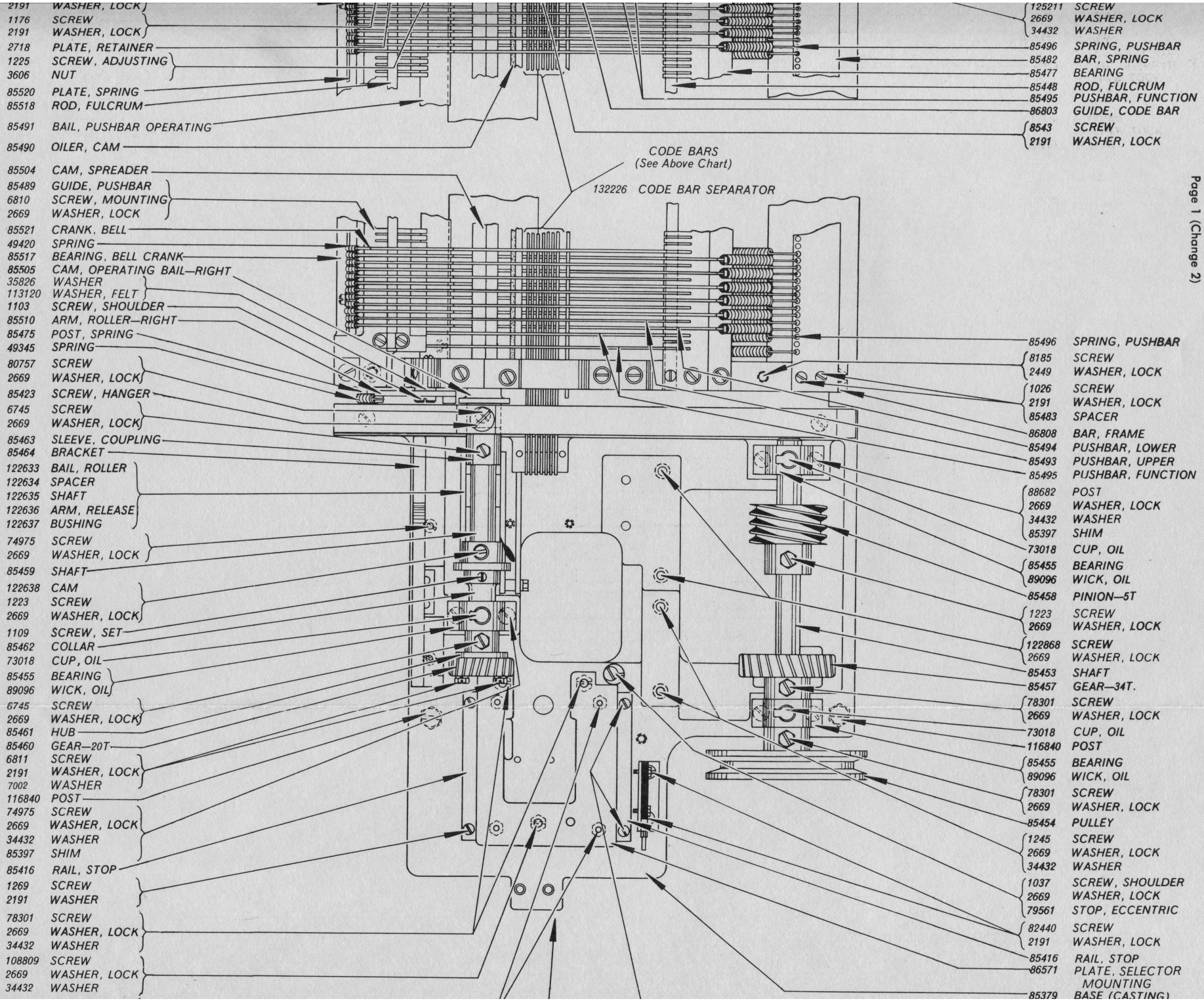
2191 WASHER, LOCK
1176 SCREW
2191 WASHER, LOCK
2718 PLATE, RETAINER
1225 SCREW, ADJUSTING
3606 NUT
85520 PLATE, SPRING
85518 ROD, FULCRUM
85491 BAIL, PUSHBAR OPERATING
85490 OILER, CAM
85504 CAM, SPREADER
85489 GUIDE, PUSHBAR
6810 SCREW, MOUNTING
2669 WASHER, LOCK
85521 CRANK, BELL
49420 SPRING
85517 BEARING, BELL CRANK
85505 CAM, OPERATING BAIL—RIGHT
35826 WASHER
113120 WASHER, FELT
1103 SCREW, SHOULDER
85510 ARM, ROLLER—RIGHT
85475 POST, SPRING
49345 SPRING
80757 SCREW
2669 WASHER, LOCK
85423 SCREW, HANGER
6745 SCREW
2669 WASHER, LOCK
85463 SLEEVE, COUPLING
85464 BRACKET
122633 BAIL, ROLLER
122634 SPACER
122635 SHAFT
122636 ARM, RELEASE
122637 BUSHING
74975 SCREW
2669 WASHER, LOCK
85459 SHAFT
122638 CAM
1223 SCREW
2669 WASHER, LOCK
1109 SCREW, SET
85462 COLLAR
73018 CUP, OIL
85455 BEARING
89096 WICK, OIL
6745 SCREW
2669 WASHER, LOCK
85461 HUB
85460 GEAR—20T
6811 SCREW
2191 WASHER, LOCK
7002 WASHER
116840 POST
74975 SCREW
2669 WASHER, LOCK
34432 WASHER
85397 SHIM
85416 RAIL, STOP
1269 SCREW
2191 WASHER
78301 SCREW
2669 WASHER, LOCK
34432 WASHER
108809 SCREW
2669 WASHER, LOCK
34432 WASHER
CODE BARS
(See Above Chart)
132226 CODE BAR SEPARATOR
125211 SCREW
2669 WASHER, LOCK
34432 WASHER
85496 SPRING, PUSHBAR
85482 BAR, SPRING
85477 BEARING
85448 ROD, FULCRUM
85495 PUSHBAR, FUNCTION
86803 GUIDE, CODE BAR
8543 SCREW
2191 WASHER, LOCK
85496 SPRING, PUSHBAR
8185 SCREW
2449 WASHER, LOCK
1026 SCREW
2191 WASHER, LOCK
85483 SPACER
86808 BAR, FRAME
85494 PUSHBAR, LOWER
85493 PUSHBAR, UPPER
85495 PUSHBAR, FUNCTION
88682 POST
2669 WASHER, LOCK
34432 WASHER
85397 SHIM
73018 CUP, OIL
85455 BEARING
89096 WICK, OIL
85458 PINION—5T
1223 SCREW
2669 WASHER, LOCK
122868 SCREW
2669 WASHER, LOCK
85453 SHAFT
85457 GEAR—34T.
78301 SCREW
2669 WASHER, LOCK
73018 CUP, OIL
116840 POST
85455 BEARING
89096 WICK, OIL
78301 SCREW
2669 WASHER, LOCK
85454 PULLEY
1245 SCREW
2669 WASHER, LOCK
34432 WASHER
1037 SCREW, SHOULDER
2669 WASHER, LOCK
79561 STOP, ECCENTRIC
82440 SCREW
2191 WASHER, LOCK
85416 RAIL, STOP
86571 PLATE, SELECTOR MOUNTING
85379 BASE (CASTING)

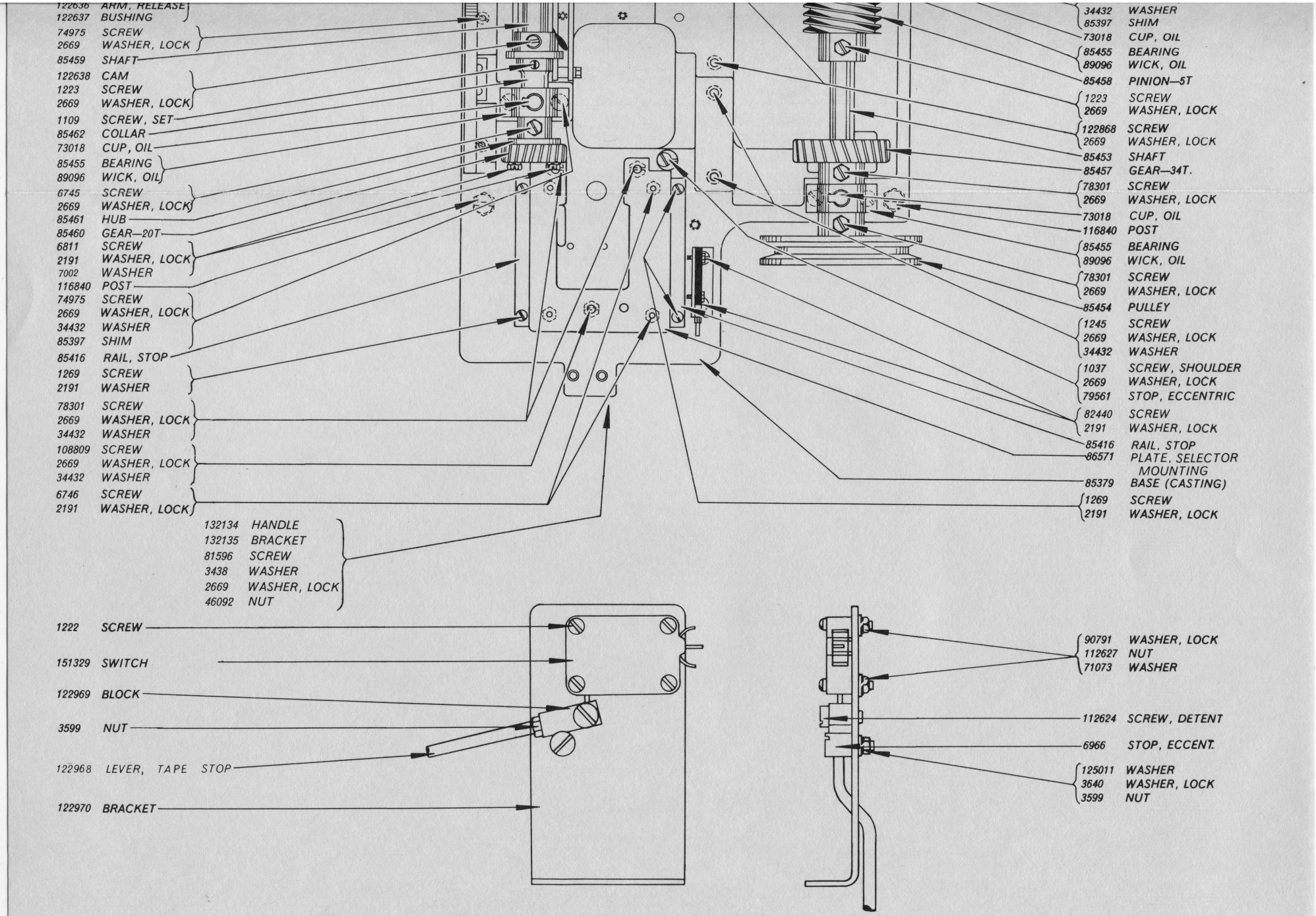

TIGHT TAPE SWITCH ASSEMBLY

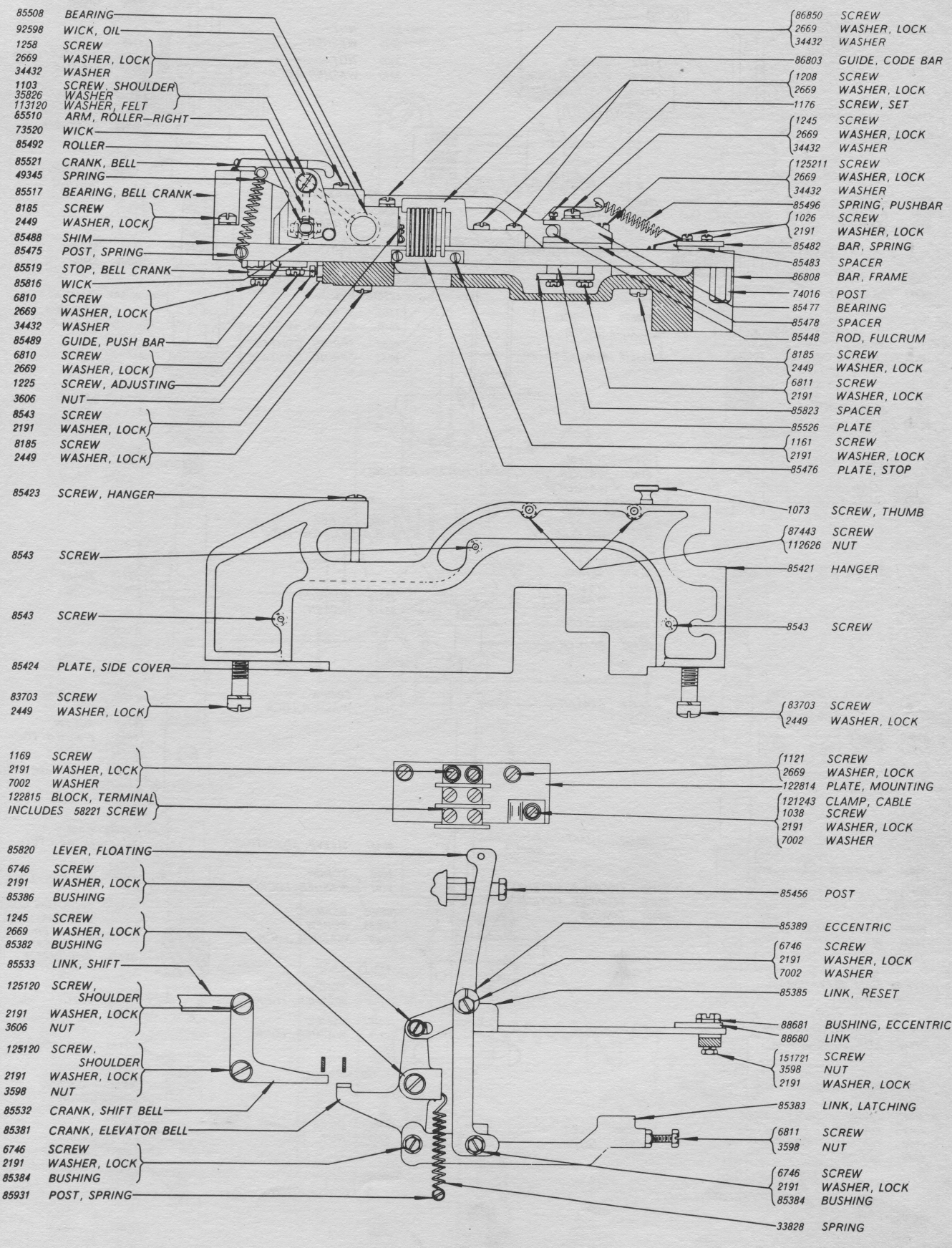
85508 BEARING
92598 WICK, OIL
1258 SCREW
2669 WASHER, LOCK
34432 WASHER
1103 SCREW, SHOULDER
35826 WASHER
113120 WASHER, FELT
65510 ARM, ROLLER—RIGHT
73520 WICK
85492 ROLLER
85521 CRANK, BELL
49345 SPRING
85517 BEARING, BELL CRANK
8185 SCREW
2449 WASHER, LOCK
85488 SHIM
85475 POST, SPRING
85519 STOP, BELL CRANK
85816 WICK
6810 SCREW
2669 WASHER, LOCK
34432 WASHER
85489 GUIDE, PUSH BAR
6810 SCREW
2669 WASHER, LOCK
1225 SCREW, ADJUSTING
3606 NUT
8543 SCREW
2191 WASHER, LOCK
8185 SCREW
2449 WASHER, LOCK
86850 SCREW
2669 WASHER, LOCK
34432 WASHER
86803 GUIDE, CODE BAR
1208 SCREW
2669 WASHER, LOCK
1176 SCREW, SET
1245 SCREW
2669 WASHER, LOCK
34432 WASHER
125211 SCREW
2669 WASHER, LOCK
34432 WASHER
85496 SPRING, PUSHBAR
1026 SCREW
2191 WASHER, LOCK
85482 BAR, SPRING
85483 SPACER
86808 BAR, FRAME
74016 POST
85477 BEARING
85478 SPACER
85448 ROD, FULCRUM
8185 SCREW
2449 WASHER, LOCK
6811 SCREW
2191 WASHER, LOCK
85823 SPACER
85526 PLATE
1161 SCREW
2191 WASHER, LOCK
85476 PLATE, STOP
85423 SCREW, HANGER
8543 SCREW
8543 SCREW
85424 PLATE, SIDE COVER
83703 SCREW
2449 WASHER, LOCK
1073 SCREW, THUMB
87443 SCREW
112626 NUT
85421 HANGER
8543 SCREW
83703 SCREW
2449 WASHER, LOCK
1169 SCREW
2191 WASHER, LOCK
7002 WASHER
122815 BLOCK, TERMINAL
INCLUDES 58221 SCREW
1121 SCREW
2669 WASHER, LOCK
122814 PLATE, MOUNTING
121243 CLAMP, CABLE
1038 SCREW
2191 WASHER, LOCK
7002 WASHER
85820 LEVER, FLOATING
6746 SCREW
2191 WASHER, LOCK
85386 BUSHING
1245 SCREW
2669 WASHER, LOCK
85382 BUSHING
85533 LINK, SHIFT
125120 SCREW, SHOULDER
2191 WASHER, LOCK
3606 NUT
125120 SCREW, SHOULDER
2191 WASHER, LOCK
3598 NUT
85532 CRANK, SHIFT BELL
85381 CRANK, ELEVATOR BELL
6746 SCREW
2191 WASHER, LOCK
85384 BUSHING
85931 POST, SPRING
85456 POST
85389 ECCENTRIC
6746 SCREW
2191 WASHER, LOCK
7002 WASHER
85385 LINK, RESET
88681 BUSHING, ECCENTRIC
88680 LINK
151721 SCREW
3598 NUT
2191 WASHER, LOCK
85383 LINK, LATCHING
6811 SCREW
3598 NUT
6746 SCREW
2191 WASHER, LOCK
85384 BUSHING
33828 SPRING

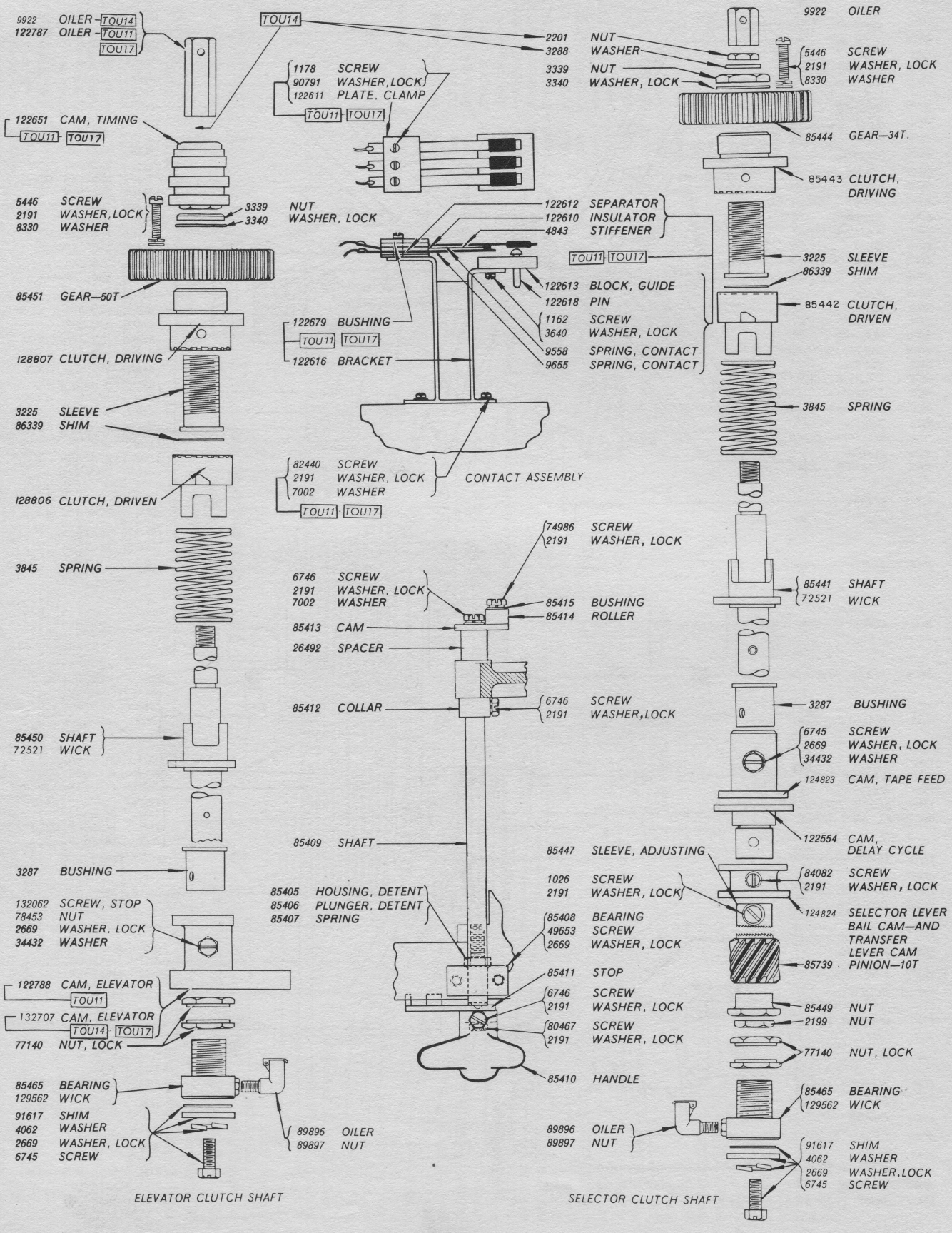
9922 OILER TOU14
122787 OILER TOU11
TOU17
122651 CAM, TIMING
TOU11 TOU17
5446 SCREW
2191 WASHER, LOCK
8330 WASHER
3339 NUT
3340 WASHER, LOCK
85451 GEAR—50T
128807 CLUTCH, DRIVING
3225 SLEEVE
86339 SHIM
128806 CLUTCH, DRIVEN
3845 SPRING
85450 SHAFT
72521 WICK
3287 BUSHING
132062 SCREW, STOP
78453 NUT
2669 WASHER, LOCK
34432 WASHER
122788 CAM, ELEVATOR
TOU11
132707 CAM, ELEVATOR
TOU14 TOU17
77140 NUT, LOCK
85465 BEARING
129562 WICK
91617 SHIM
4062 WASHER
2669 WASHER, LOCK
6745 SCREW
89896 OILER
89897 NUT
ELEVATOR CLUTCH SHAFT
TOU14
1178 SCREW
90791 WASHER, LOCK
122611 PLATE, CLAMP
TOU11 TOU17
2201 NUT
3288 WASHER
3339 NUT
3340 WASHER, LOCK
122612 SEPARATOR
122610 INSULATOR
4843 STIFFENER
TOU11 TOU17
122613 BLOCK, GUIDE
122618 PIN
1162 SCREW
3640 WASHER, LOCK
9558 SPRING, CONTACT
9655 SPRING, CONTACT
122679 BUSHING
TOU11 TOU17
122616 BRACKET
82440 SCREW
2191 WASHER, LOCK
7002 WASHER
TOU11 TOU17
CONTACT ASSEMBLY
74986 SCREW
2191 WASHER, LOCK
6746 SCREW
2191 WASHER, LOCK
7002 WASHER
85415 BUSHING
85414 ROLLER
85413 CAM
26492 SPACER
85412 COLLAR
6746 SCREW
2191 WASHER, LOCK
85409 SHAFT
85405 HOUSING, DETENT
85406 PLUNGER, DETENT
85407 SPRING
85408 BEARING
49653 SCREW
2669 WASHER, LOCK
85411 STOP
6746 SCREW
2191 WASHER, LOCK
80467 SCREW
2191 WASHER, LOCK
85410 HANDLE
9922 OILER
5446 SCREW
2191 WASHER, LOCK
8330 WASHER
85444 GEAR—34T.
85443 CLUTCH, DRIVING
3225 SLEEVE
86339 SHIM
85442 CLUTCH, DRIVEN
3845 SPRING
85441 SHAFT
72521 WICK
3287 BUSHING
6745 SCREW
2669 WASHER, LOCK
34432 WASHER
124823 CAM, TAPE FEED
122554 CAM, DELAY CYCLE
85447 SLEEVE, ADJUSTING
1026 SCREW
2191 WASHER, LOCK
84082 SCREW
2191 WASHER, LOCK
124824 SELECTOR LEVER BAIL CAM—AND TRANSFER LEVER CAM
85739 PINION—10T
85449 NUT
2199 NUT
77140 NUT, LOCK
85465 BEARING
129562 WICK
89896 OILER
89897 NUT
91617 SHIM
4062 WASHER
2669 WASHER, LOCK
6745 SCREW
SELECTOR CLUTCH SHAFT

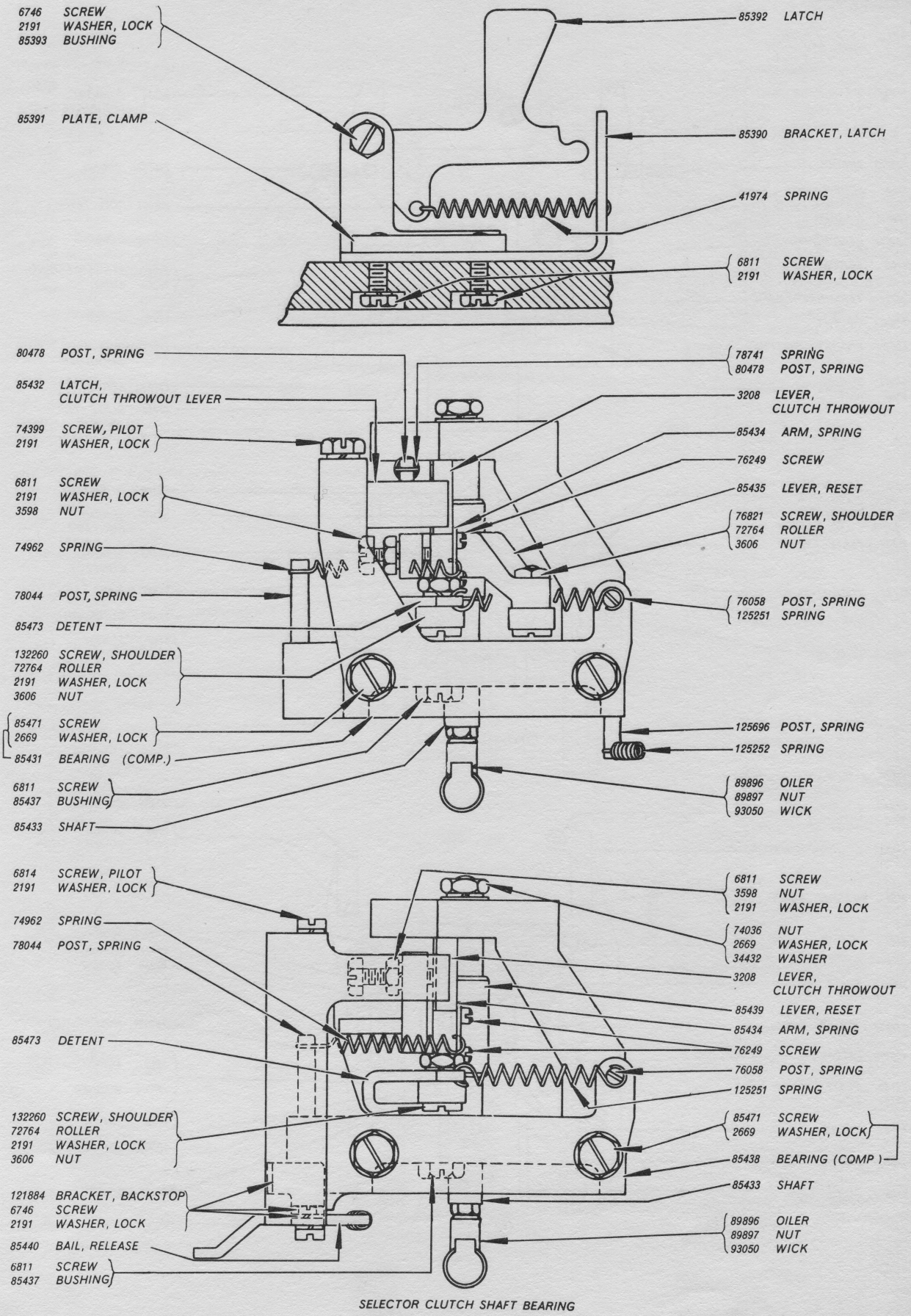

SELECTOR CLUTCH SHAFT BEARING

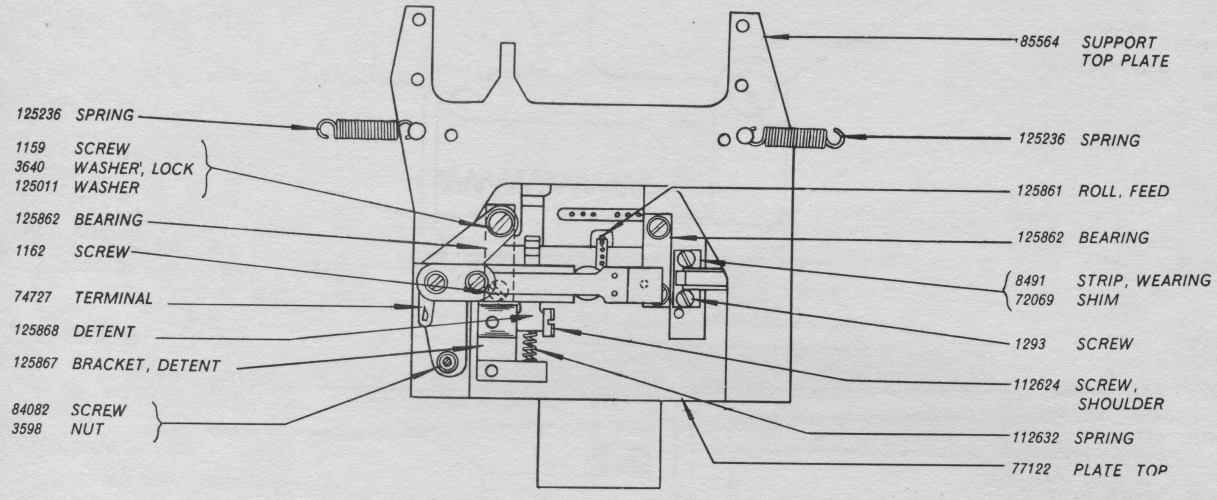

BOTTOM VIEW

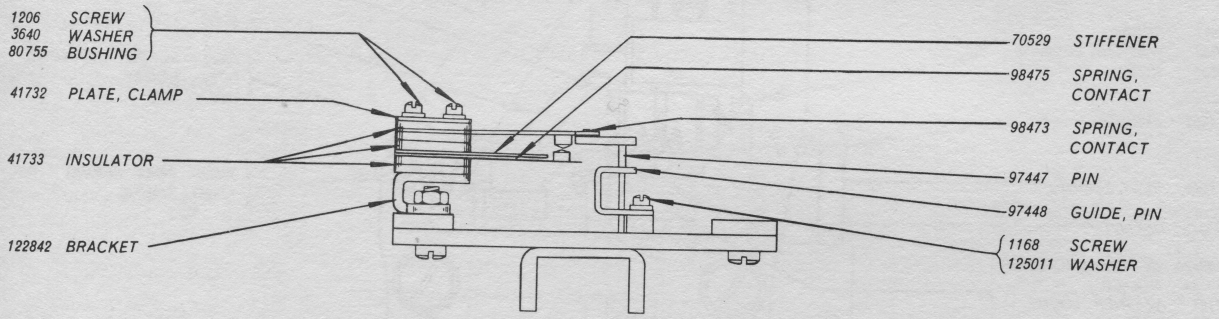

CONTACT ASSEMBLY

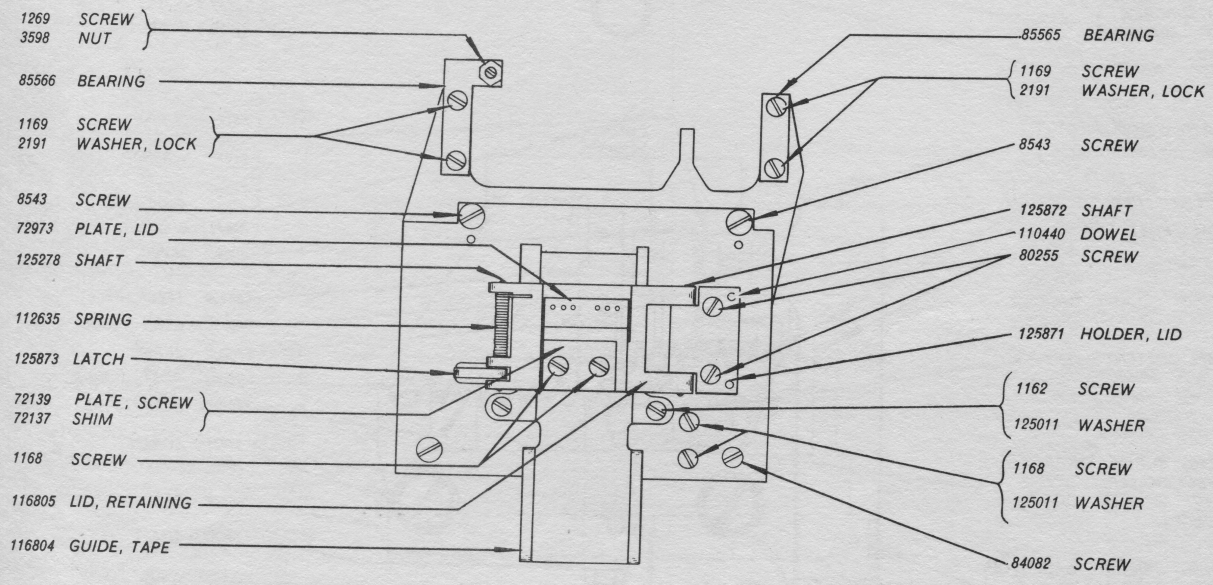

TOP VIEW

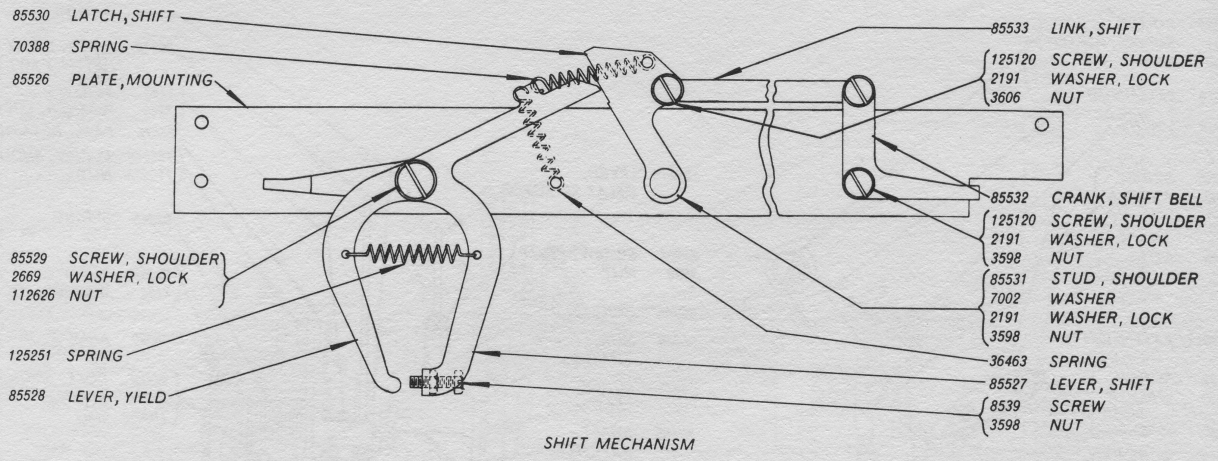

SHIFT MECHANISM

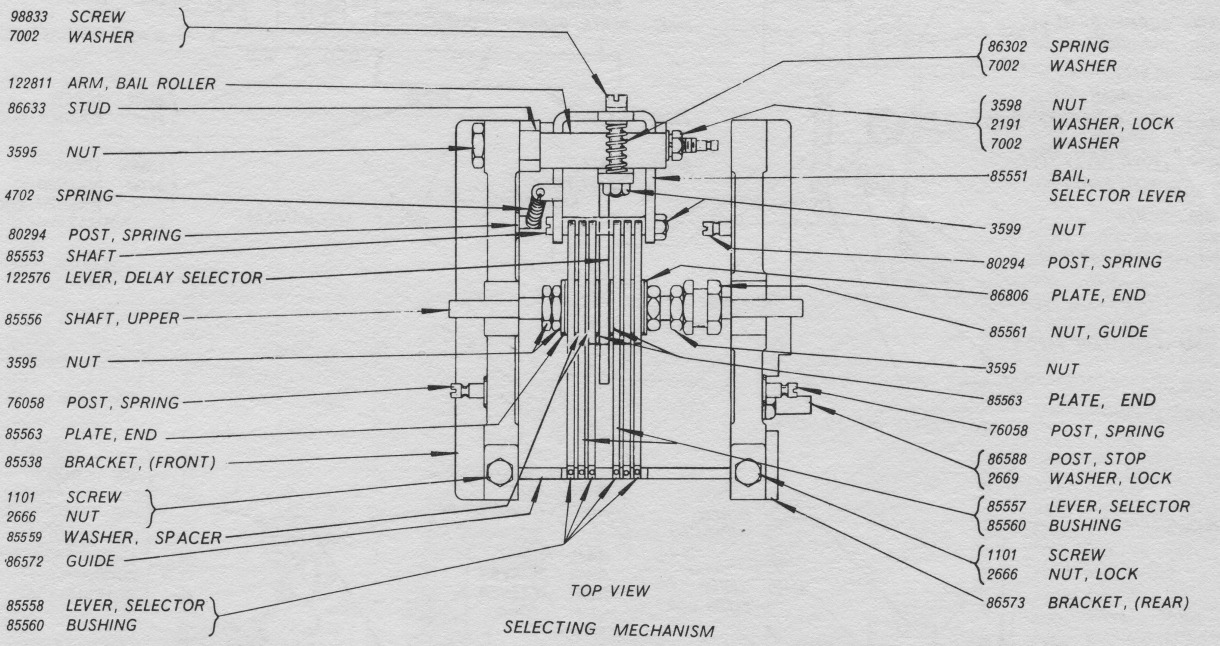

TOP VIEW

SELECTING MECHANISM

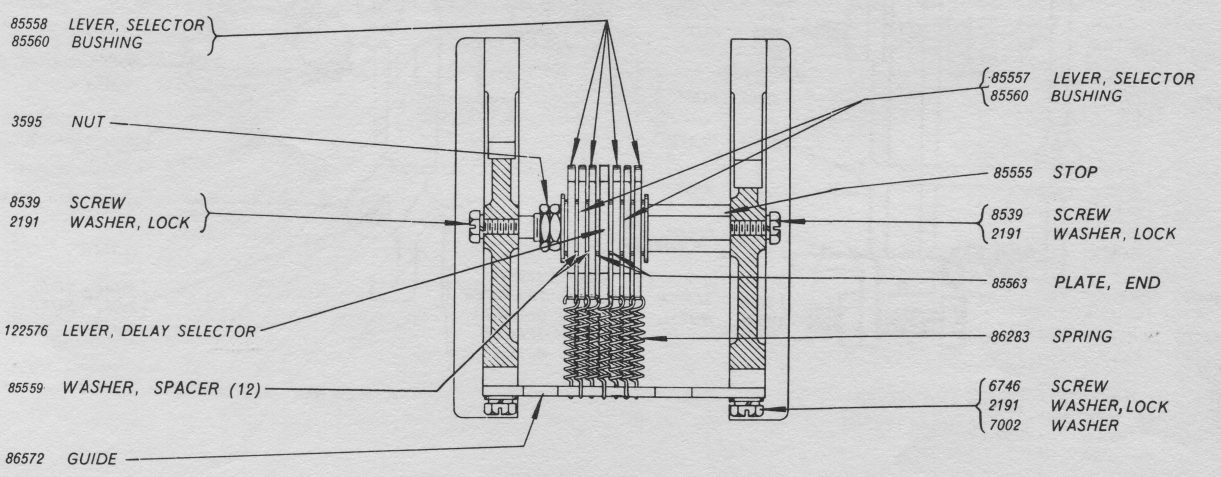

TOP VIEW

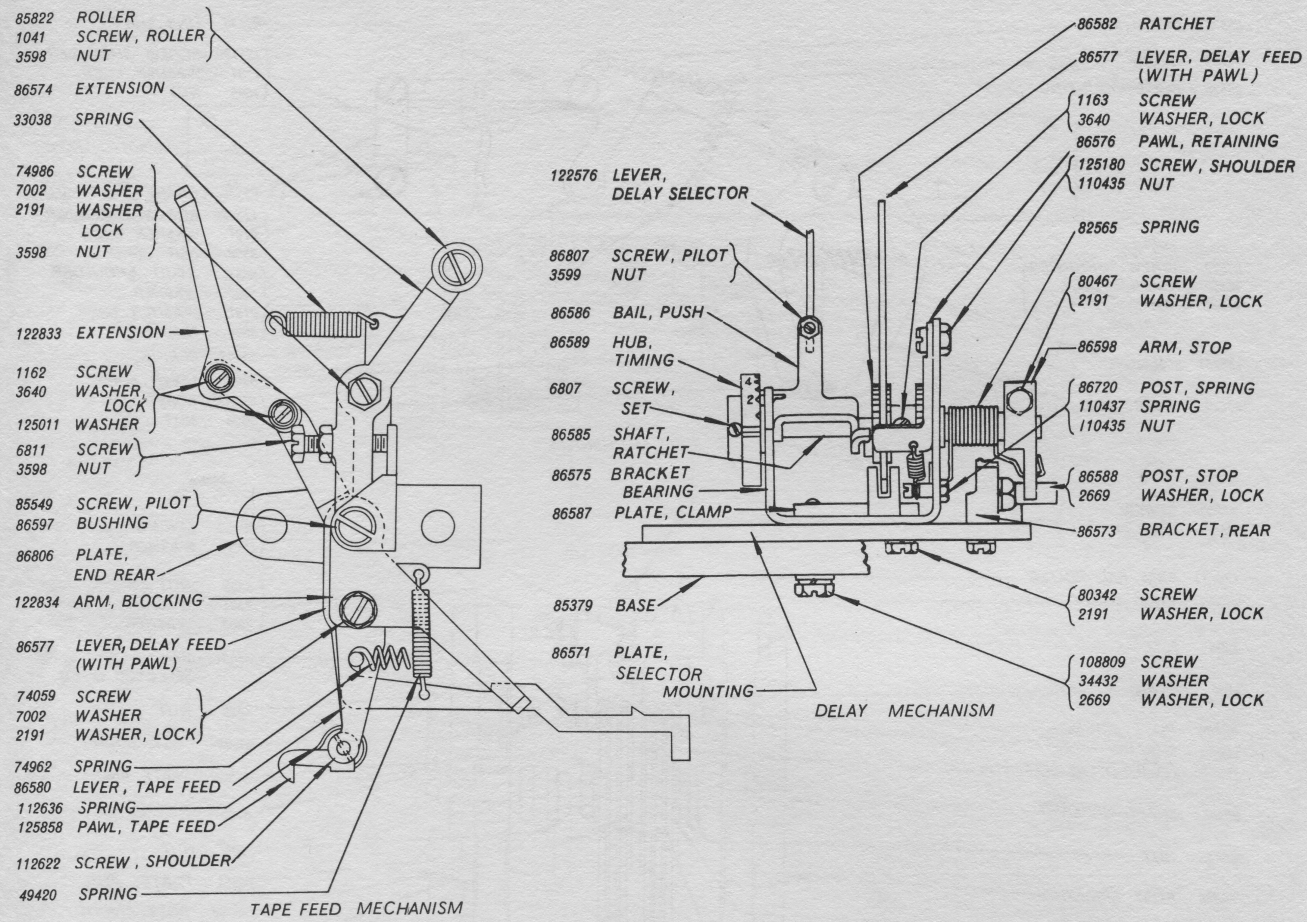
85822 ROLLER
1041 SCREW, ROLLER
3598 NUT
86574 EXTENSION
33038 SPRING
74986 SCREW
7002 WASHER
2191 WASHER LOCK
3598 NUT
122833 EXTENSION
1162 SCREW
3640 WASHER, LOCK
125011 WASHER
6811 SCREW
3598 NUT
85549 SCREW, PILOT
86597 BUSHING
86806 PLATE, END REAR
122834 ARM, BLOCKING
86577 LEVER, DELAY FEED (WITH PAWL)
74059 SCREW
7002 WASHER
2191 WASHER, LOCK
74962 SPRING
86580 LEVER, TAPE FEED
112636 SPRING
125858 PAWL, TAPE FEED
112622 SCREW, SHOULDER
49420 SPRING
TAPE FEED MECHANISM
122576 LEVER, DELAY SELECTOR
86807 SCREW, PILOT
3599 NUT
86586 BAIL, PUSH
86589 HUB, TIMING
6807 SCREW, SET
86585 SHAFT, RATCHET
86575 BRACKET BEARING
86587 PLATE, CLAMP
85379 BASE
86571 PLATE, SELECTOR MOUNTING
86582 RATCHET
86577 LEVER, DELAY FEED (WITH PAWL)
1163 SCREW
3640 WASHER, LOCK
86576 PAWL, RETAINING
125180 SCREW, SHOULDER
110435 NUT
82565 SPRING
80467 SCREW
2191 WASHER, LOCK
86598 ARM, STOP
86720 POST, SPRING
110437 SPRING
110435 NUT
86588 POST, STOP
2669 WASHER, LOCK
86573 BRACKET, REAR
80342 SCREW
2191 WASHER, LOCK
108809 SCREW
34432 WASHER
2669 WASHER, LOCK
DELAY MECHANISM

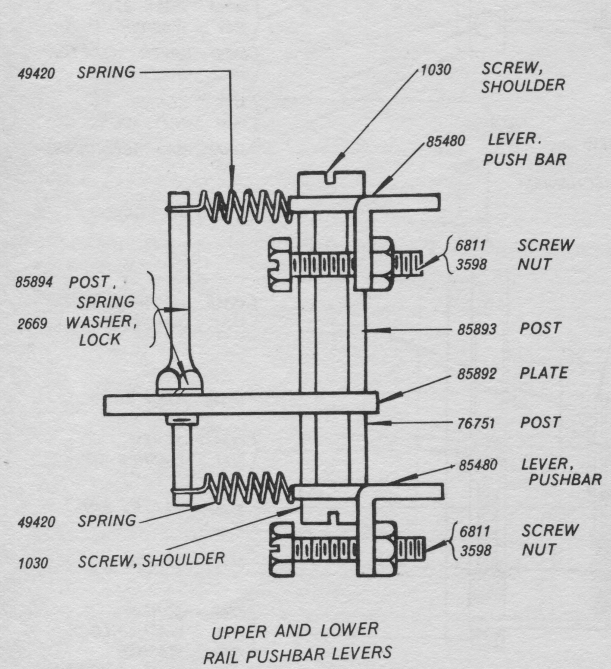
49420 SPRING
1030 SCREW, SHOULDER
85480 LEVER, PUSH BAR
6811 SCREW
3598 NUT
85894 POST, SPRING
2669 WASHER, LOCK
85893 POST
85892 PLATE
76751 POST
85480 LEVER, PUSHBAR
49420 SPRING
6811 SCREW
3598 NUT
1030 SCREW, SHOULDER
UPPER AND LOWER RAIL PUSHBAR LEVERS

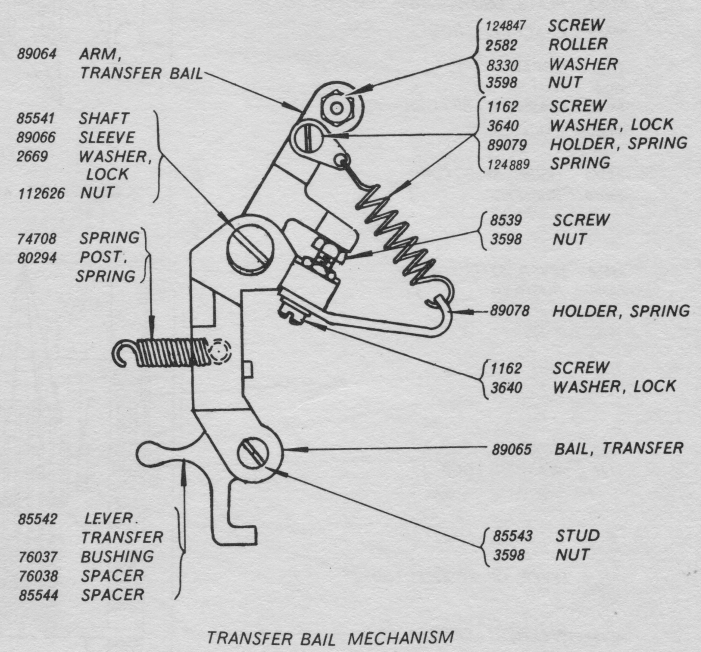
89064 ARM, TRANSFER BAIL
85541 SHAFT
89066 SLEEVE
2669 WASHER, LOCK
112626 NUT
74708 SPRING
80294 POST, SPRING
85542 LEVER, TRANSFER
76037 BUSHING
76038 SPACER
85544 SPACER
124847 SCREW
2582 ROLLER
8330 WASHER
3598 NUT
1162 SCREW
3640 WASHER, LOCK
89079 HOLDER, SPRING
124889 SPRING
8539 SCREW
3598 NUT
89078 HOLDER, SPRING
1162 SCREW
3640 WASHER, LOCK
89065 BAIL, TRANSFER
85543 STUD
3598 NUT
TRANSFER BAIL MECHANISM

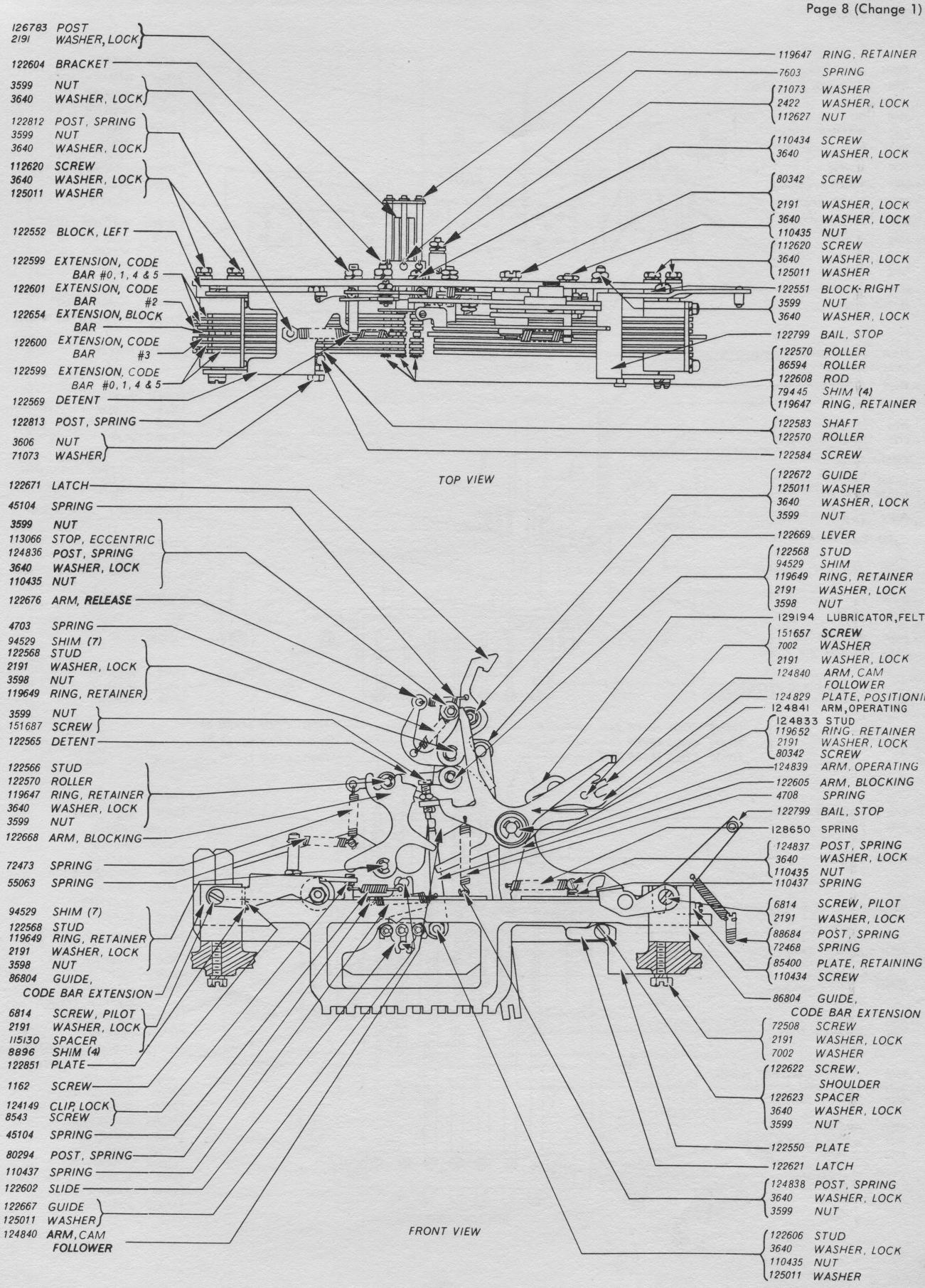
126783 POST
2191 WASHER, LOCK
122604 BRACKET
3599 NUT
3640 WASHER, LOCK
122812 POST, SPRING
3599 NUT
3640 WASHER, LOCK
112620 SCREW
3640 WASHER, LOCK
125011 WASHER
122552 BLOCK, LEFT
122599 EXTENSION, CODE BAR #0, 1, 4 & 5
122601 EXTENSION, CODE BAR #2
122654 EXTENSION, BLOCK BAR
122600 EXTENSION, CODE BAR #3
122599 EXTENSION, CODE BAR #0, 1, 4 & 5
122569 DETENT
122813 POST, SPRING
3606 NUT
71073 WASHER
119647 RING, RETAINER
7603 SPRING
71073 WASHER
2422 WASHER, LOCK
112627 NUT
110434 SCREW
3640 WASHER, LOCK
80342 SCREW
2191 WASHER, LOCK
3640 WASHER, LOCK
110435 NUT
112620 SCREW
3640 WASHER, LOCK
125011 WASHER
122551 BLOCK, RIGHT
3599 NUT
3640 WASHER, LOCK
122799 BAIL, STOP
122570 ROLLER
86594 ROLLER
122608 ROD
79445 SHIM (4)
119647 RING, RETAINER
122583 SHAFT
122570 ROLLER
122584 SCREW
TOP VIEW
122671 LATCH
45104 SPRING
3599 NUT
113066 STOP, ECCENTRIC
124836 POST, SPRING
3640 WASHER, LOCK
110435 NUT
122676 ARM, RELEASE
4703 SPRING
94529 SHIM (7)
122568 STUD
2191 WASHER, LOCK
3598 NUT
119649 RING, RETAINER
3599 NUT
151687 SCREW
122565 DETENT
122566 STUD
122570 ROLLER
119647 RING, RETAINER
3640 WASHER, LOCK
3599 NUT
122668 ARM, BLOCKING
72473 SPRING
55063 SPRING
94529 SHIM (7)
122568 STUD
119649 RING, RETAINER
2191 WASHER, LOCK
3598 NUT
86804 GUIDE, CODE BAR EXTENSION
6814 SCREW, PILOT
2191 WASHER, LOCK
115130 SPACER
8896 SHIM (4)
122851 PLATE
1162 SCREW
124149 CLIP, LOCK
8543 SCREW
45104 SPRING
80294 POST, SPRING
110437 SPRING
122602 SLIDE
122667 GUIDE
125011 WASHER
124840 ARM, CAM FOLLOWER
FRONT VIEW
122672 GUIDE
125011 WASHER
3640 WASHER, LOCK
3599 NUT
122669 LEVER
122568 STUD
94529 SHIM
119649 RING, RETAINER
2191 WASHER, LOCK
3598 NUT
129194 LUBRICATOR, FELT
151657 SCREW
7002 WASHER
2191 WASHER, LOCK
124840 ARM, CAM FOLLOWER
124829 PLATE, POSITIONING
124841 ARM, OPERATING
124833 STUD
119652 RING, RETAINER
2191 WASHER, LOCK
80342 SCREW
124839 ARM, OPERATING
122605 ARM, BLOCKING
4708 SPRING
122799 BAIL, STOP
128650 SPRING
124837 POST, SPRING
3640 WASHER, LOCK
110435 NUT
110437 SPRING
6814 SCREW, PILOT
2191 WASHER, LOCK
88684 POST, SPRING
72468 SPRING
85400 PLATE, RETAINING
110434 SCREW
86804 GUIDE, CODE BAR EXTENSION
72508 SCREW
2191 WASHER, LOCK
7002 WASHER
122622 SCREW, SHOULDER
122623 SPACER
3640 WASHER, LOCK
3599 NUT
122550 PLATE
122621 LATCH
124838 POST, SPRING
3640 WASHER, LOCK
3599 NUT
122606 STUD
3640 WASHER, LOCK
110435 NUT
125011 WASHER

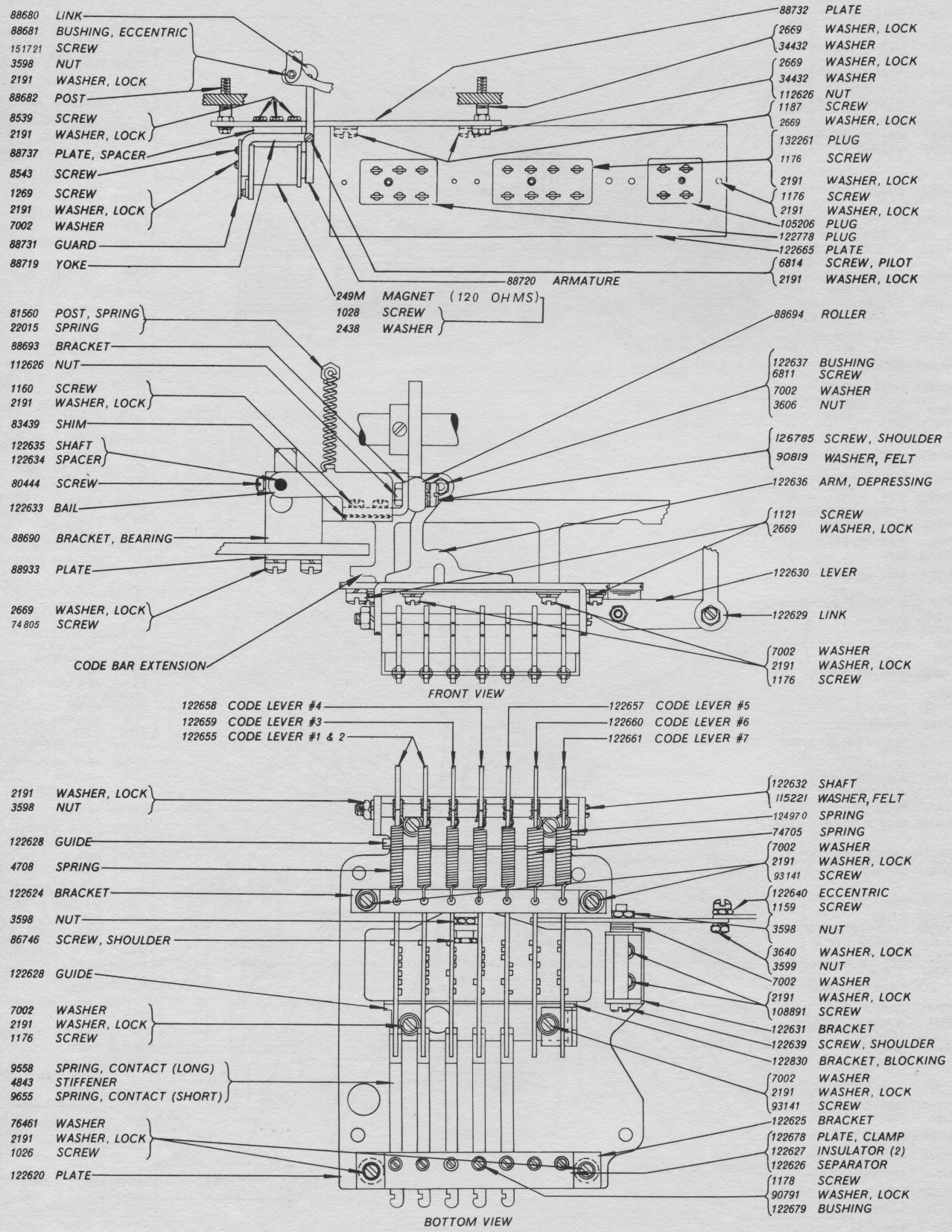
88680 LINK
88681 BUSHING, ECCENTRIC
151721 SCREW
3598 NUT
2191 WASHER, LOCK
88682 POST
8539 SCREW
2191 WASHER, LOCK
88737 PLATE, SPACER
8543 SCREW
1269 SCREW
2191 WASHER, LOCK
7002 WASHER
88731 GUARD
88719 YOKE
88732 PLATE
2669 WASHER, LOCK
34432 WASHER
2669 WASHER, LOCK
34432 WASHER
112626 NUT
1187 SCREW
2669 WASHER, LOCK
132261 PLUG
1176 SCREW
2191 WASHER, LOCK
1176 SCREW
2191 WASHER, LOCK
105206 PLUG
122778 PLUG
122665 PLATE
6814 SCREW, PILOT
2191 WASHER, LOCK
88720 ARMATURE
249M MAGNET (120 OHMS)
1028 SCREW
2438 WASHER
81560 POST, SPRING
22015 SPRING
88693 BRACKET
112626 NUT
1160 SCREW
2191 WASHER, LOCK
83439 SHIM
122635 SHAFT
122634 SPACER
80444 SCREW
122633 BAIL
88690 BRACKET, BEARING
88933 PLATE
2669 WASHER, LOCK
74805 SCREW
CODE BAR EXTENSION
88694 ROLLER
122637 BUSHING
6811 SCREW
7002 WASHER
3606 NUT
126785 SCREW, SHOULDER
90819 WASHER, FELT
122636 ARM, DEPRESSING
1121 SCREW
2669 WASHER, LOCK
122630 LEVER
122629 LINK
7002 WASHER
2191 WASHER, LOCK
1176 SCREW
FRONT VIEW
122658 CODE LEVER #4
122659 CODE LEVER #3
122655 CODE LEVER #1 & 2
122657 CODE LEVER #5
122660 CODE LEVER #6
122661 CODE LEVER #7
2191 WASHER, LOCK
3598 NUT
122628 GUIDE
4708 SPRING
122624 BRACKET
3598 NUT
86746 SCREW, SHOULDER
122628 GUIDE
7002 WASHER
2191 WASHER, LOCK
1176 SCREW
9558 SPRING, CONTACT (LONG)
4843 STIFFENER
9655 SPRING, CONTACT (SHORT)
76461 WASHER
2191 WASHER, LOCK
1026 SCREW
122620 PLATE
122632 SHAFT
115221 WASHER, FELT
124970 SPRING
74705 SPRING
7002 WASHER
2191 WASHER, LOCK
93141 SCREW
122640 ECCENTRIC
1159 SCREW
3598 NUT
3640 WASHER, LOCK
3599 NUT
7002 WASHER
2191 WASHER, LOCK
108891 SCREW
122631 BRACKET
122639 SCREW, SHOULDER
122830 BRACKET, BLOCKING
7002 WASHER
2191 WASHER, LOCK
93141 SCREW
122625 BRACKET
122678 PLATE, CLAMP
122627 INSULATOR (2)
122626 SEPARATOR
1178 SCREW
90791 WASHER, LOCK
122679 BUSHING
BOTTOM VIEW

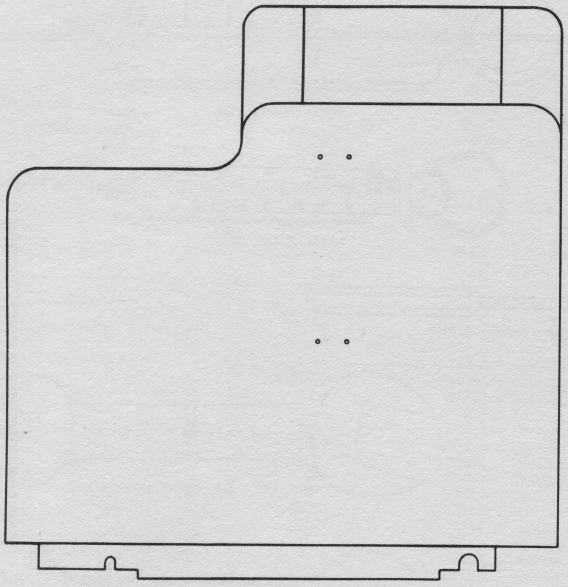

122794 COVER

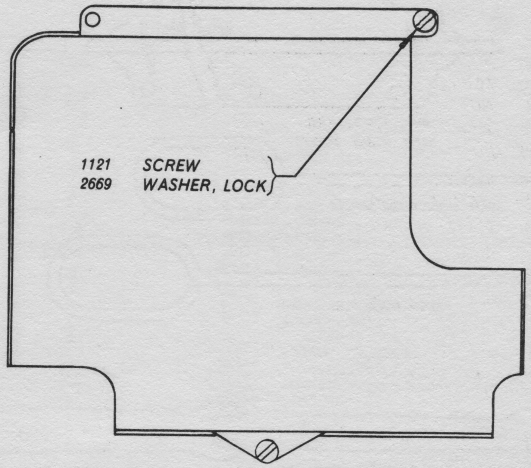

122795 COVER

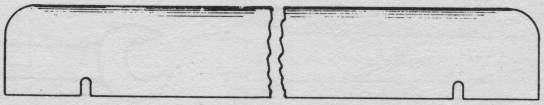

85426 COVER, UPPER FRONT

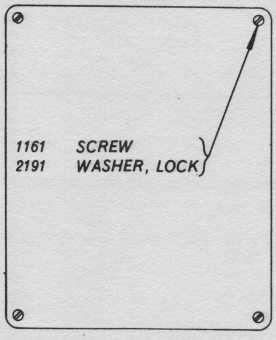

85380 PLATE, BOTTOM COVER

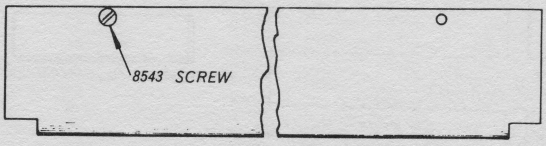

85427 COVER, LOWER FRONT

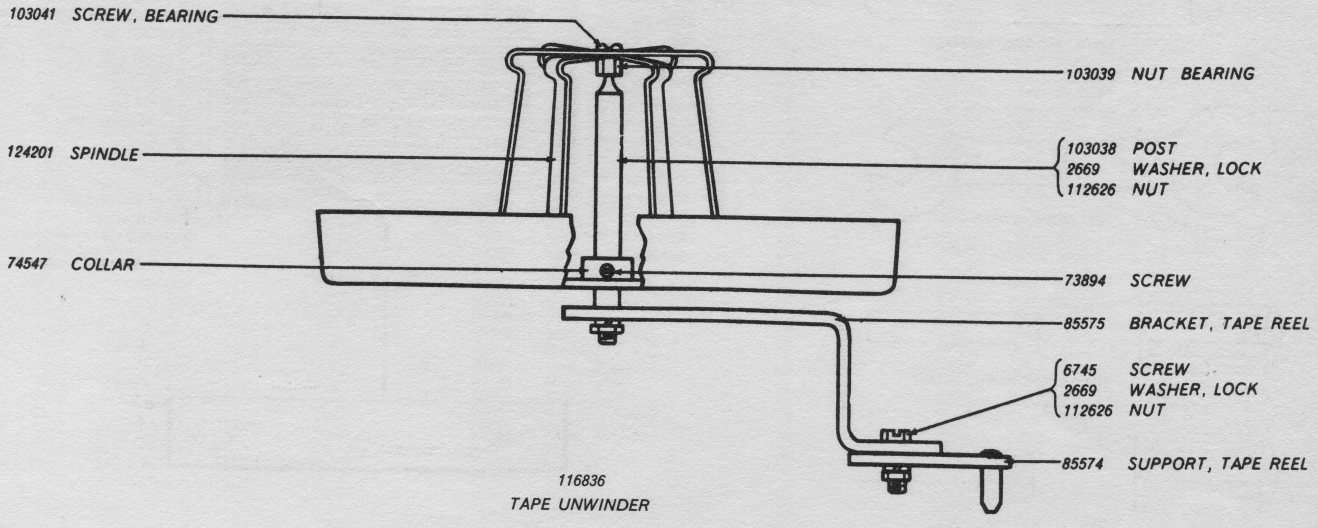

116836
TAPE UNWINDER

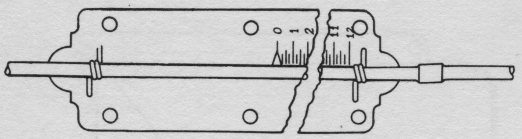

4841 SCALE, 12 LB.
82711 SCALE 64 OZ.

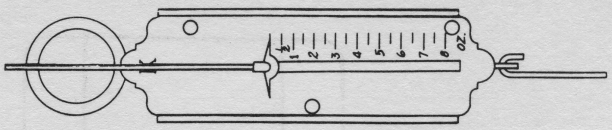

110443 SCALE, 8 OZ.

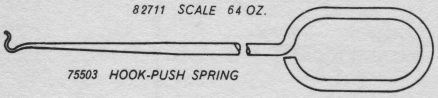

75503 HOOK-PUSH SPRING

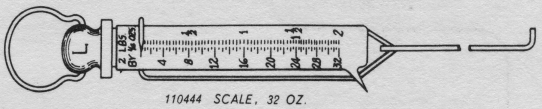

110444 SCALE, 32 OZ.

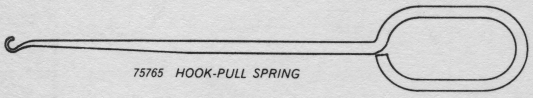

75765 HOOK-PULL SPRING

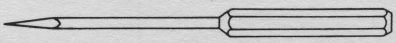

110442 DRIVER, SCREW

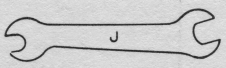

125763 3/16"-1/4" WRENCH, OPEN

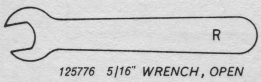

125776 5/16" WRENCH, OPEN

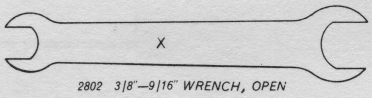

2802 3/8"—9/16" WRENCH, OPEN

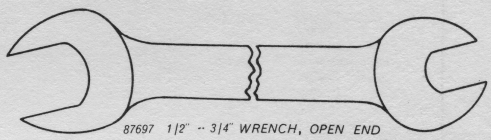

87697 1/2" -- 3/4" WRENCH, OPEN END

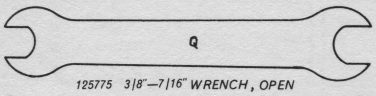

125775 3/8"—7/16" WRENCH, OPEN

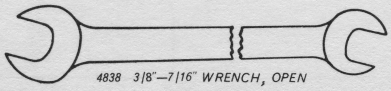

4838 3/8"—7/16" WRENCH, OPEN

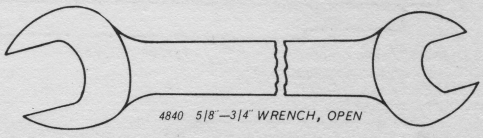

4840 5/8"—3/4" WRENCH, OPEN

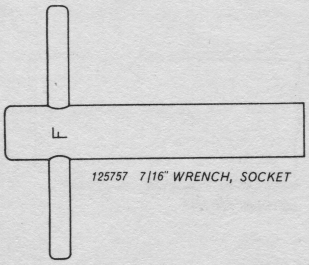

125757 7/16" WRENCH, SOCKET

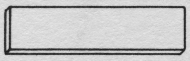

125783 STONE, CARBORUNDUM

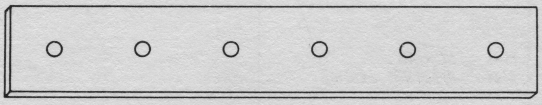

2215 GAUGE, TAPE

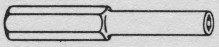

125752 3/16" WRENCH, SCREW DRIVER SOCKET

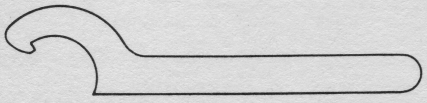

86340 WRENCH, CAPSTAN

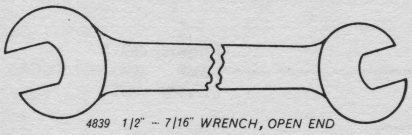

4839 1/2" -- 7/16" WRENCH, OPEN END

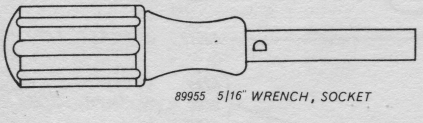

89955 5/16" WRENCH, SOCKET

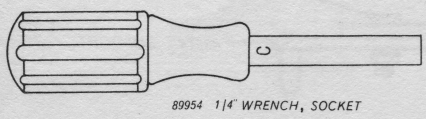

89954 1/4" WRENCH, SOCKET

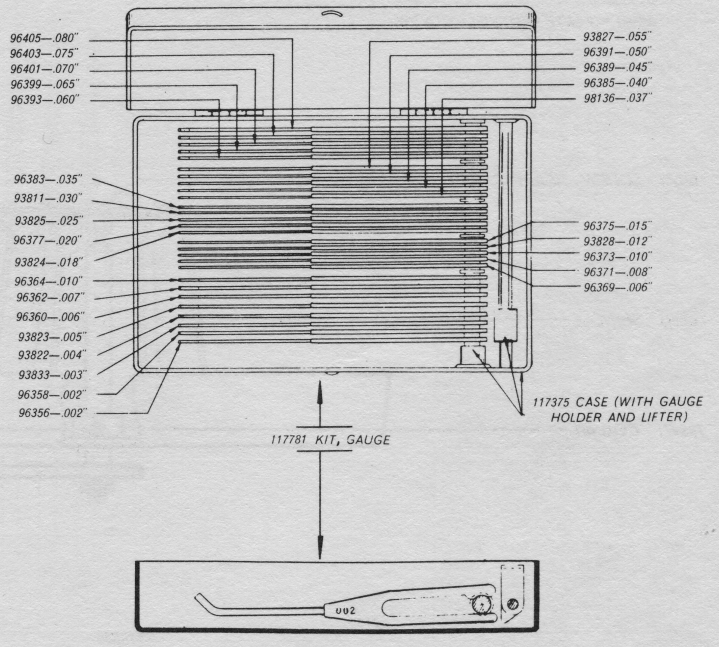

NUMERICAL INDEX

Part Number	Part	Page
249M	Magnet	9
1026	Screw (6-40 Shoulder)	1,2,3 9
1028	Screw (6-40 Shoulder)	9
1030	Screw (6-40 Shoulder)	7
1037	Screw (6-40 Shoulder)	1
1038	Screw (6-40 Shoulder)	2
1041	Screw (6-40 Shoulder)	7
1073	Screw (6-40 Thumb)	2
1101	Screw (3/16-40)	6
1103	Screw (3/16-40 Shoulder)	1,2
1109	Screw, Set (10-32x7/32)	1
1121	Screw (10-32x3/8)	2,9,10
1159	Screw (4-40x3/8)	5,9
1160	Screw (6-40x5/16)	9
1161	Screw (6-40x1/4)	1,2,10
1162	Screw (4-40x1/4)	3,5,7,8
1163	Screw (4-40x3/16)	7
1168	Screw (4-40x5/16)	5
1169	Screw (6-40x7/16)	2,5
1176	Screw (6-40x3/16)	1,2,9
1178	Screw (2-56x7/16)	3,9
1187	Screw (10-32x1/4)	9
1206	Screw (4-40x9/16)	5
1208	Screw (10-32x5/8)	1,2
1222	Screw (2-56x1/2)	1
1223	Screw (10-32x1/2)	1
1225	Screw, Adjusting (6-40x13/32)	1,2
1245	Screw (10-32x1)	1,2
1258	Screw (10-32x1-1/4)	1,2
1269	Screw (6-40x1/2)	1,5,9
1293	Screw (4-40x1/8)	5
2191	Washer, Lock	1,2,3,4,5,6,7,8,9,10
2199	Nut (7/16-32 Hex.)	3
2201	Nut (5/16-32 Hex.)	3
2215	Gauge, Tape	11
2422	Washer, Lock	8
2438	Washer	9
2449	Washer, Lock	1,2
2582	Roller	7
2666	Nut, Lock (3/16-40)	6
2669	Washer, Lock	1,2,3,4,6,7,9,10
2718	Plate, Retainer	1
2802	Wrench (3/8-9/16" Open)	11
3208	Lever, Clutch Throwout	4
3225	Sleeve	3
3287	Bushing	3
3288	Washer	3
3339	Nut (9/16-32 Hex.)	3
3340	Washer, Lock	3
3438	Washer	1
3595	Nut (1/4-32 Hex.)	6
3598	Nut (6-40 Hex.)	2,4,5,6,7,8,9
3599	Nut (4-40 Hex.)	1,6,7,8,9
3606	Nut (6-40 Hex.)	1,2,4,6,8,9
3640	Washer, Lock	1,3,5,7,8,9
3845	Spring	3
4062	Washer	3
4702	Spring	6
4703	Spring	8
4708	Spring	8,9
4838	Wrench (3/8"-7/16" Open)	11
4839	Wrench (1/2"-7/16" Open)	11
4840	Wrench (5/8"-3/4" Open)	11
4841	Scale, 12 lb.	11
4843	Stiffener	3,9
5446	Screw (6-40x9/16)	3
6745	Screw (10-32x1/2)	1,3,10
6746	Screw (6-40x5/16)	1,2,3,4,6
6807	Screw (6-40x3/16 Set)	7
6810	Screw, Mounting (10-32x3/8)	1,2
6811	Screw (6-40x5/8)	1,2,4,7,9
6814	Screw (6-40 Pilot)	4,8,9
6966	Stop, Eccentric	1
7002	Washer	1,2,3,6,7,8,9
7603	Spring	8
8185	Screw (1/4-20x3/4)	1,2
8330	Washer	3,7
8491	Strip, Wearing	5
8539	Screw (6-40x1/2)	6,7,9
8543	Screw (6-40 x 1/4)	1,2,5,8,9,10
8896	Shim	8
9558	Spring, Contact	3,9
9655	Spring, Contact	3,9
9922	Oiler	3
22015	Spring	9
26492	Spacer	3
33038	Spring	7
33828	Spring	2
34432	Washer	1,2,3,4,7,9
35826	Washer	1,2
36463	Spring	6
41732	Plate, Clamp	5
41733	Insulator	5
41974	Spring	4
45104	Spring	8
46092	Nut	1
49345	Spring	1,2
49420	Spring	1,7
49653	Screw (10x32x13/16)	3
55063	Spring	8
58221	Screw (6-32x1/4)	2
70388	Spring	6
70529	Stiffener	5
71073	Washer	1,8
72069	Shim	5
72137	Shim	5
72139	Plate, Screw	5
72468	Spring	8
72473	Spring	8
72508	Screw (6-40x3/8)	8
72521	Wick	3
72764	Roller	4
72973	Plate, Lid	5
73018	Cup, Oil	1
73520	Wick	2
73894	Screw (6-40x1/4)	10
74016	Post	1,2
74036	Nut (10-32 Hex.)	4
74059	Screw (6-40x7/32)	7
74399	Screw (6-40 Pilot)	4
74547	Collar	10
74705	Spring	9
74708	Spring	7
74727	Terminal	5
74805	Screw (10-32x3/4)	9
74962	Spring	4,7
74975	Screw (10-32x1/2)	1
74986	Screw (6-40x13/32)	3,7
75503	Hook, Spring - Push	11
75765	Hook, Spring - Pull	11
76037	Bushing	7
76038	Spacer	7
76058	Post, Spring	4,6
76249	Screw (6-40x1/8)	4
76461	Washer	9
76751	Post	7
76821	Screw (6-40 Shoulder)	4
77122	Plate, Top	5
77140	Nut (9/16-32 Hex.)	3
78044	Post Spring	4
78301	Screw (10-32x5/8)	1
78453	Nut (10-32)	3
78741	Spring	4
79445	Shim	8
79561	Stop, Eccentric	1
80255	Screw (4-40x21/64)	5
80294	Post, Spring	6,7,8
80342	Screw (6-40x23/64)	7,8
80444	Screw (6-40x1/4)	9
80467	Screw (6-40x11/32)	3,7
80478	Post, Spring	4
80755	Bushing	5
80757	Screw (10-32x1/2)	1
81560	Post, Spring	9
81596	Screw	1
82440	Screw (6-40x7/16)	1,3
82565	Spring	7
82711	Scale, 64 oz	11
83439	Shim	9
83703	Screw (1/4-20x1-1/4)	1,2
84082	Screw (6-40x13/32)	3,5
85379	Base	1,7
85380	Plate, Bottom Cover	10
85381	Crank, Elevator Bell	2
85382	Bushing	2
85383	Link, Latching	2
85384	Bushing	2
85385	Link, Reset	2
85386	Bushing	2
85389	Eccentric	2
85390	Bracket, Latch	4
85391	Plate, Clamp	4
85392	Latch	4
85393	Bushing	4
85397	Shim	1
85400	Plate, Retainer	8
85405	Housing, Detent	3
85406	Plunger, Detent	3
85407	Spring	3
85408	Bearing	3
85409	Shaft	3
85410	Handle	3
85411	Stop	3
85412	Collar	3
85413	Cam	3
85414	Roller	3
85415	Bushing	3
85416	Rail, Stop	1
85421	Hanger	1,2
85423	Screw, Hanger (5/16-18 Pilot)	1,2
85424	Plate, Side Cover	2
85426	Cover, Front - Upper	10
85427	Cover, Front - Lower	10
85431	Bearing	4
85432	Latch, Clutch Throw-Out Lever	4
85433	Shaft	4
85434	Arm, Spring	4
85435	Lever, Reset	4
85437	Bushing	4
85438	Bearing	4
85439	Lever, Reset	4
85440	Bail, Release	4
85441	Shaft	3
85442	Clutch, Driven	3
85443	Clutch, Driving	3
85444	Gear - 34T	3
85447	Sleeve, Adjusting	3
85448	Rod, Fulcrum	1,2
85449	Nut (7/16-32 Hex.)	3
85450	Shaft	3
85451	Gear, 50 - T	3
85453	Shaft	1
85454	Pulley	1
85455	Bearing	1
85456	Post	2
85457	Gear, 34 - T	1
85458	Pinion, 5 - T	1
85459	Shaft	1
85460	Gear, 20 - T	1
85461	Hub	1
85462	Collar	1
85463	Sleeve, Coupling	1
85464	Bracket	1
85465	Bearing	3
85471	Screw (10-32x1/2)	4
85473	Detent	4
85475	Post, Spring	1,2
85476	Plate, Stop	2
85477	Bearing	1,2
85478	Spacer	2
85480	Lever, Pushbar	1,7
85482	Bar, Spring	1,2
85483	Spacer	1,2
85488	Shim	1,2
85489	Guide, Push Bar	1,2
85490	Oiler, Cam	1
85491	Bail, Push Bar Operating	1
85492	Roller	2
85493	Pushbar, Upper	1
85494	Pushbar, Lower	1
85495	Pushbar, Function	1
85496	Spring, Pushbar	1,2
85497	Bar, Code #0	1
85498	Bar, Code #1	1
85500	Bar, Code #3	1
85501	Bar, Code #4	1
85502	Bar, Code #5	1
85504	Cam, Spreader	1
85505	Cam, Operating Bail-Right	1
85506	Cam, Operating Bail-Left	1
85508	Bearing	1,2
85510	Arm, Roller-Right	1,2
85511	Arm, Roller-Left	1
85517	Bearing, Bell Crank	1,2
85518	Rod, Fulcrum	1
85519	Stop, Bell Crank	2
85520	Plate, Spring	1
85521	Crank, Bell	1,2
85526	Plate, Mounting	2,6
85527	Lever, Shift	6
85528	Lever, Yield	6
85529	Screw (10-32 Shoulder)	6
85530	Latch, Shift	6
85531	Stud, Shoulder	6
85532	Crank, Shift Bell	2,6
85533	Link, Shift	2,6
85538	Bracket - Front	6
85541	Shaft	7
85542	Lever, Transfer	7

Part Number	Part	Page
85543	Stud	7
85544	Spacer	7
85549	Screw (1/4-32 Pilot)	7
85551	Bail, Selector Lever	6
85553	Shaft	6
85555	Stop	6
85556	Shaft-Upper	6
85557	Lever, Selector	6
85558	Lever, Selector	6
85559	Washer, Spacer	6
85560	Bushing	6
85561	Nut (1/4-32 Guide)	6
85563	Plate, End	6
85564	Support, Top Plate	5
85565	Bearing	5
85566	Bearing	5
85574	Support	10
85575	Bracket	10
85739	Pinion, 10 - T	3
85816	Wick	2
85820	Lever, Floating	2
85822	Roller	7
85823	Spacer	2
85892	Plate	7
85893	Post	7
85894	Post, Spring	7
85895	Pushbar, Rail Shift	1
85931	Post, Spring	2
86283	Spring	6
86302	Spring	6
86333	Screw (3/16-40x7/32)	1
86339	Shim	3
86340	Wrench, Capstan	11
86571	Plate, Selector Mounting	1, 7
86572	Guide	6
86573	Bracket-Rear	6, 7
86574	Extension	7
86575	Bracket, Bearing	7
86576	Pawl, Retaining	7
86577	Lever, Delay Feed (with Pawl)	7
86580	Lever, Tape Feed	7
86582	Ratchet	7
86585	Shaft, Ratchet	7
86586	Bail, Push	7
86587	Plate, Clamp	7
86588	Post, Stop	6, 7
86589	Hub, Timing	7
86594	Roller	8
86597	Bushing	7
86598	Arm, Stop	7
86633	Stud	6
86720	Post, Spring	7
86746	Screw (6-40 Shoulder)	9
86803	Guide, Code Bar	1, 2
86804	Guide, Code Bar Extension	8
86806	Plate, End	6, 7
86807	Screw (4-40 Pilot)	7
86808	Bar, Frame	1, 2
86850	Screw (10-32x1-1/4)	1, 2
87443	Screw (10-32x15/16)	1, 2
87697	1/2" - 3/4" Wrench, Open End	11
88680	Link	2, 9
88681	Bushing, Eccentric	2, 9
88682	Post	1, 9
88684	Post, Spring	8
88690	Bracket, Bearing	9
88693	Bracket	9
88694	Roller	9
88719	Yoke	9
88720	Armature	9
88731	Guard, Terminal	9
88732	Plate	9
88737	Plate, Spacer	9
88933	Plate	9
89064	Arm, Transfer Bail	7
89065	Bail, Transfer	7
89066	Sleeve	7
89078	Holder, Spring	7
89079	Holder, Spring	7
89096	Wick, Oil	1
89896	Oiler	3, 4
89897	Nut, (10-32 Hex.)	3, 4
89954	Wrench, 1/4" Socket	11
89955	Wrench, 5/16" Socket	11
90791	Washer, Lock	1, 3, 9
90819	Washer, Felt	9
91137	Bar, Code - Shift	1
91138	Bar, Code #2	1
91617	Shim	3
92598	Wick, Oil	2
93050	Wick, Oil	4
93058	Bar, Code #0	1
93059	Bar, Code #1	1
93060	Bar, Code #3	1
93141	Screw (6-40x7/32)	9
93811	Gauge, Wire (.030")	11
93822	Gauge, Flat (.004")	11
93823	Gauge, Flat (.005")	11
93824	Gauge, Wire (.018")	11
93825	Gauge, Wire (.025")	11
93827	Gauge, Wire (.055")	11
93828	Gauge, Wire (.012")	11
93833	Gauge, Flat (.003")	11
94529	Shim	8
96356	Gauge, Wire (.002")	11
96358	Guage, Flat (.002")	11
96360	Gauge, Flat (.006")	11
96362	Gauge, Flat (.007")	11
96364	Gauge, Flat (.010")	11
96369	Gauge, Wire (.006")	11
96371	Gauge, Wire (.008")	11
96373	Gauge, Wire (.010")	11
96375	Gauge, Wire (.015")	11
96377	Gauge, Wire (.020")	11
96383	Gauge, Wire (.035")	11
96385	Gauge, Wire (.040")	11
96389	Gauge, Wire (.045")	11
96391	Gauge, Wire (.050")	11
96393	Gauge, Wire (.060")	11
96399	Gauge, Wire (.065")	11
96401	Gauge, Wire (.070")	11
96403	Gauge, Wire (.075")	11
96405	Gauge, Wire (.080")	11
97273	Bar, Code - Shift	1
97447	Pin	5
97448	Guide, Pin	5
98136	Gauge, Wire (.037")	11
98473	Spring, Contact	5
98475	Spring, Contact	5
98833	Screw (4-40x1)	6
103038	Post	10
103039	Nut, Bearing	10
103041	Screw, Bearing	10
105206	Plug	9
108809	Screw (10-32x27/32)	1, 7
108891	Screw (6-40x3/16)	9
110434	Screw (4-40 x 3/16)	8
110435	Nut (4-40 Hex.)	7, 8
110437	Spring	7, 8
110440	Dowel	5
110442	Driver, Screw	11
110443	Scale, 8 oz.	11
110444	Scale, 32 oz.	11
112620	Screw (4-40x1/2)	8
112622	Screw (4-40 Shoulder)	7
112624	Screw (4-40 Shoulder)	1, 5
112626	Nut (10-32 Hex.)	1, 2, 6, 7, 9, 10
112627	Nut (2-56)	1, 8
112632	Spring	5
112635	Spring	5
112636	Spring	7
113066	Stop, Eccentric	8
113120	Washer, Felt	1, 2
115130	Spacer	8
115221	Washer, Felt	9
116804	Plate, Tape Guide	5
116805	Lid, Retaining	5
116822	Post	1
116836	Unwinder, Tape	10
116840	Post	1
117375	Case (with gauge holder and lifter)	11
117781	Gauge, Kit	11
119647	Ring, Retainer	8
119649	Ring, Retainer	8
119652	Ring, Retainer	8
121243	Clamp, Cable	2
121884	Bracket, Backstop	4
122550	Plate	8
122551	Block - Right	8
122552	Block - Left	8
122554	Cam, Delay Cycle	3
122565	Detent	8
122566	Stud	8
122568	Stud	8
122569	Detent	8
122570	Roller	8
122576	Lever, Delay Selector	6, 7
122583	Shaft	8
122584	Screw	8
122599	Extension, Code Bar	8
122600	Extension, Code Bar	8
122601	Extension, Code Bar	8
122602	Slide	8
122604	Bracket	8
122605	Arm, Blocking	8
122606	Stud	8
122608	Rod	8
122610	Insulator	3
122611	Clamp, Plate	3
122612	Separator	3
122613	Block, Guide	3
122616	Bracket	3
122618	Pin	3
122620	Plate	9
122621	Latch	8
122622	Screw (4-40 Shoulder)	8
122623	Spacer	8
122624	Bracket	9
122625	Bracket	9
122626	Separator	9
122627	Insulator	9
122628	Guide	9
122629	Link	9
122630	Lever	9
122631	Bracket	9
122632	Shaft	9
122633	Bail, Roller	1, 9
122634	Spacer	1, 9
122635	Shaft	1, 9
122636	Arm, Depressing	1, 9
122637	Bushing	1, 9
122638	Cam	1
122639	Screw (6-40 Shoulder)	9
122640	Eccentric	9
122643	Bar, Code - Blocking	1
122651	Cam, Timing	3
122654	Extension, Block Bar	8
122655	Lever, Code #1 & #2	9
122657	Lever, Code #5	9
122658	Lever, Code #4	9
122659	Lever, Code #3	9
122660	Lever, Code #6	9
122661	Lever, Code #7	9
122665	Plate	9
122667	Guide	8
122668	Arm, Blocking	8
122669	Lever	8
122671	Latch	8
122672	Guide	8
122676	Arm, Release	8
122678	Plate, Clamp	9
122679	Bushing	3, 9
122778	Plug	9
122787	Oiler	3
122788	Cam, Elevator	3
122794	Cover	10
122795	Cover	10
122797	Bar, Code - Blocking	1
122799	Bail, Stop	8
122811	Arm, Bail Roller	6
122812	Post, Spring	8
122813	Post, Spring	8
122814	Plate, Mounting	2
122815	Block, Terminal	2
122830	Bracket, Blocking	9
122833	Extension	7
122834	Arm, Blocking	7
122842	Bracket	5
122851	Plate	8
122868	Screw (10-32x1)	1
122968	Lever, Tape Stop	1
122969	Block	1
122970	Bracket	1
124149	Clip, Lock	8
124201	Spindle	10
124823	Cam, Tape Feed	3
124824	Cam, Selector Lever Bail and Transfer Lever	3
124829	Plate, Positioning	8
124833	Stud	8
124836	Post, Spring	8
124837	Post, Spring	8
124838	Post, Spring	8
124839	Arm, Operating	8
124840	Arm, Cam Follower	8
124841	Arm, Operating	8
124847	Screw (6-40 Shoulder)	7
124889	Spring	7
124970	Spring	9
125011	Washer	1, 5, 7, 8
125120	Screw (6-40 Shoulder)	2, 6
125180	Screw (4-40 Shoulder)	7
125211	Screw (10-32x3/4)	1, 2
125236	Spring	5
125251	Spring	4, 6
125252	Spring	4
125278	Shaft	5
125696	Post, Spring	4
125752	Wrench (3/16" Screw Driver Socket)	11
125757	Wrench (7/16" Socket)	11
125763	Wrench (3/16" - 1/4")	11
125775	Wrench (3/8" - 7/16")	11
125776	Wrench (5/16" Open)	11
125783	Stone, Carborundum	11
125858	Pawl, Tape Feed	7
125861	Roll, Feed	5
125862	Bearing, Feed Roll	5
125867	Bracket, Detent	5
125868	Detent	5
125871	Holder, Lid	5
125872	Shaft	5
125873	Latch	5
126783	Post	8
126785	Screw (10-32 Shoulder)	9
128650	Spring	8
128806	Clutch, Driven	3
128807	Clutch, Driving	3
129194	Lubricator, Felt	8
129562	Wick	3
132062	Screw (10-32)	3
132134	Handle	1
132135	Bracket	1
132226	Code Bar Separator	1
132260	Screw (6-40 Shoulder)	4
132261	Plug	9
132707	Cam, Elevator	3
151329	Switch	1
151657	Screw (6-40x1/4)	8
151687	Screw (4-40x7/16)	8
151721	Screw (6-40x3/4)	2, 9